ENERDRAIS

Diego Cervantes Rodríguez

Patent Registration Document

12/03/2026

Green Tech Generator & MicroMobility IoT Tracker

Content

Technical Field 2
Background Problem 2
Summary of the Invention 2
Brief Description of the Drawings 3
Detailed Description 4
Mechanical Energy Harvesting Assembly 4
Radial Velocity Amplification Principle 4
Electrical Energy Conversion System 5
Embedded Monitoring and Communication System 5
Data Communication and Network Integration 6
Example Operational Performance 6
Operation of the System 7
Mechanical Parts 7
Electrical Components 7
Embedded System 7
Conclusion, Ramifications and Scope 7
Alternative Configurations 8
Claims 9
Figures: 11
Comparative Table 16

Technical Field

The present invention relates to energy harvesting systems for micromobility vehicles, particularly to wheel-integrated electrical generation systems capable of converting rotational motion from a wheel into electrical energy while enabling integrated monitoring and data transmission functionalities.

Background Problem

Bicycles and other micromobility vehicles are increasingly used as sustainable transportation alternatives in urban environments. Many such vehicles incorporate electronic components such as lighting systems, positioning devices, communication modules, and sensors that require reliable electrical power.

Conventional bicycle power generation systems, including hub dynamos and bottle dynamos, typically provide limited electrical efficiency and low power output. At the same time, human-powered transportation continuously produces mechanical energy during normal operation, much of which is wasted, without being captured or reused.

As cities adopt shared micromobility systems, large fleets of bicycles are deployed and used daily by large numbers of riders. The cumulative mechanical energy generated through such usage represents a potentially valuable distributed energy resource if efficiently harvested and stored. Accordingly, there exists a need for improved energy harvesting systems capable of converting wheel rotation into usable electrical power while minimizing additional mechanical resistance and enabling monitoring of generated energy and CO_2 impact.

Summary of the Invention

The present invention provides an energy generation assembly configured to convert rotational motion from a bicycle's wheel into electrical energy. The system includes at least two electrical generators positioned at a radial offset from the axis of rotation of the wheel, enabling rotational velocity amplification relative to the hub.

By positioning the generator away from the wheel axis and coupling it to the internal rim structure, the system increases generator rotational speed without requiring mechanical gear reduction systems. This configuration allows efficient electrical energy generation while minimizing additional pedaling resistance.

In certain embodiments, multiple generators may be distributed along the internal circumference of the wheel. The generated electrical energy may be rectified and conditioned using an energy management circuit and stored within an onboard battery system.

In further embodiments, the system may include an integrated monitoring module capable of collecting operational data and transmitting information wirelessly to external systems.

Brief Description of the Drawings

The accompanying drawings illustrate example embodiments of the invention and are incorporated herein by reference.

FIG. 1 illustrates a lateral view of the mechanical assembly from the energy harvesting wheel system, including a bicycle hub (1), a bicycle rim (2), two or more generators positioned radially within the rim (3), structural support plates (4), mechanical couplers configured to engage the generators with the inner section of the rim (5), lateral stabilization rollers (6), and a protective enclosure for electrical components (7).

FIG. 2 illustrates the electrical enclosure content of the system integrated within the wheel structure by removing one of the lateral plates, including the hub (1), rim (2), rectifier modules configured to convert generator output to direct current (8), a buck-boost energy converter module for maximum power point tracking (MPPT) (9), an energy storage battery (10), a waterproof protective enclosure (7), mechanical couplers between the BLDC generators and rim (5), structure stabilization rollers (6), and a separate power supply battery for the embedded monitoring system (12).

FIG. 3 illustrates the embedded monitoring and wireless communication system integrated with the energy harvesting assembly, including the generators (3), rectifier modules (8), electrical enclosure (7), energy storage battery (10), ESP32 microcontroller unit (11), energy tracking circuit board (13), and sensing modules configured to collect power, positioning, maintenance, and environmental data (14).

FIG. 4 illustrates a section frontal view from the structural arrangement of the wheel-mounted generation system, including the hub (1), generators (3), rim (2), structural plates (4), mechanical couplers (5), and lateral rollers (6) configured to maintain mechanical stability and enable radial offset placement of generators within the rim.

FIG. 5 illustrates an electrical schematic diagram of a three-phase rectifier circuit configured to convert alternating current generated by the brushless generators into direct current. The circuit includes a set of rectifier diodes arranged in a three-phase full bridge configuration and a filtering capacitor configured to smooth the rectified output before it is supplied to the energy converter buck-boost MPPT module.

FIG. 6 illustrates a schematic diagram of the energy tracking and embedded monitoring circuit board. The circuit includes an ESP32 microcontroller unit configured to collect operational location like location, power (voltage and current), environmental sensors, and communication interfaces enabling wireless transmission of system data with WiFi and LoRa Meshtastic protocols, enabling the system to connect to a remote backend deployed service, making this an IoT (Internet of Things) prototype.

Detailed Description

The following detailed description describes example embodiments of the invention with reference to the accompanying drawings. The embodiments described herein are illustrative in nature and that various modifications may be made without departing from the scope of the invention.

Mechanical Energy Harvesting Assembly

Referring to **FIG. 1**, a wheel-integrated energy harvesting system is illustrated. The system includes a bicycle wheel assembly comprising a hub (1) and a rim (2). In certain embodiments, the rim may correspond to a sprint-type bicycle rim configured to provide an internal surface suitable for mechanical engagement with generator's mechanical couplers.

One or more electrical generators (3) are positioned radially offset from the axis of rotation of the hub (1). In the illustrated embodiment, two generators are positioned within the interior region of the rim (2). The generators may comprise brushless direct-current (BLDC) motors configured to operate as electrical generators during rotational motion of the wheel, having no reduction gears for rotation optimization.

The generators (3) are mechanically coupled to the rim (2) through one or more mechanical couplers that surround them (5) that function as rolling contact elements between the generators and the rim surface. The couplers allow rotational motion of the rim to be transferred to the generator shafts while enabling mechanical friction.

Structural support for the system is provided by two structural plates (4), which in certain embodiments may comprise aluminum sheets positioned laterally on both sides of the wheel assembly. These plates provide structural integrity for the generator mounting system and maintain alignment of the internal components with 3 or more arms during operation.

To further maintain mechanical stability, one or more lateral rollers (6) may be provided. These rollers act as stabilizing elements that maintain alignment between the generators and the rim during rotation and reduce vibration or mechanical deformation/displacement during use.

Electrical and electronic components associated with the system may be housed within a protective enclosure (7) configured to provide environmental protection against water, dust, and mechanical impacts.

Radial Velocity Amplification Principle

In contrast with conventional bicycle dynamos, which typically operate directly at the wheel hub or through gear systems, the present invention utilizes **inner radial offset placement of generators** to increase generator rotational velocity without introducing mechanical gear reduction systems.

The rotational velocity relationship may be expressed by the following relationship:

$$v = r \cdot \omega$$

where v represents the tangential velocity at a radial distance r from the axis of rotation and ω represents the angular velocity of the wheel.

By positioning the generators (3) at a radial offset from the hub axis, the tangential velocity at the generator contacts points increases relative to the rotational speed of the hub. This results in an amplification of generator rotational velocity without requiring mechanical transmission systems such as gears or chains.

In one example embodiment utilizing a 26-inch rim (R26), the generators may be positioned approximately 17.5 cm from the axis of rotation. This configuration increases generator rotational speed 4 times per motor, relative to hub-mounted generators and enables improved electrical power generation efficiency while minimizing additional pedaling resistance.

In certain embodiments, multiple generators may be distributed around the inner circumference of the rim. For example, the system may include two generators, although other embodiments may utilize three, four, or up to six generators depending on the desired electrical output and mechanical design constraints like weight or space.

Electrical Energy Conversion System

Referring to **FIG. 2 and 5**, the electrical energy generated by the generators (3) is converted and conditioned using an electrical energy management system.

Each generator produces three-phase alternating current (AC) during wheel rotation. The output from each generator is supplied to a respective rectifier module (8), which converts the three-phase alternating current into direct current.

The rectified electrical output is then supplied to an energy conditioning module (9), which may comprise a DC-DC converter including maximum power point tracking (MPPT) functionality. The buck-boost MPPT converter module regulates voltage and current levels to maximize energy harvesting efficiency across varying wheel speeds.

The conditioned electrical energy is stored within an energy storage device (10), which in certain embodiments may comprise a rechargeable lithium-based battery such as a lithium-polymer (LiPo) or lithium-iron-phosphate ($LiFePO_4$) battery. In one embodiment, the battery may operate at approximately 36 V nominal voltage with a capacity of approximately 4400 mAh.

In certain configurations, multiple generators may be electrically connected in series or parallel after rectification to optimize voltage or current output depending on the operational requirements of the energy conditioning system.

Embedded Monitoring and Communication System

Referring to **FIG. 3 and 6**, the system may further include an embedded system monitoring module configured to collect operational and environmental data associated with the energy harvesting process.

The monitoring system may include a microcontroller (11), which in certain embodiments may comprise an ESP32 microcontroller capable of wireless communication. The microcontroller may be powered by a secondary battery (12) configured to supply power to the monitoring system.

An energy tracking circuit board (13) may be integrated within the enclosure and configured to collect data related to system performance, including generated electrical energy, battery charging status, and system health parameters.

One or more sensors (14) may also be provided, including sensors for environmental monitoring, positioning, or maintenance diagnostics. For example, sensors may include GPS modules, environmental temperature, or humidity sensors used for preventive maintenance monitoring.

In certain embodiments, electrical energy generation data may be sampled through a voltage sensing circuit connected between the energy conditioning module (9) and the energy storage battery (10). The sensed voltage signal may be reduced by using a voltage divider and provided to the monitoring system for measurement and analysis.

Data Communication and Network Integration

The embedded monitoring system may transmit collected operational data to external systems using wireless communication technologies like WiFi and LoRa.

In certain embodiments, the microcontroller (11) may communicate directly with a remote server or backend platform using Wi-Fi connectivity when network access is available.

In alternative embodiments where direct network connectivity is unavailable, the system may utilize a low-power mesh networking protocol, such as LoRa-based communication networks. Using such networks, data packets may be transmitted between multiple bicycles or infrastructure nodes until reaching a network gateway with internet connectivity, which is called a Meshtastic system.

Collected data may include energy generation statistics, environmental impact metrics, maintenance status indicators, and user activity data. This data may be transmitted to a backend data platform and presented to users through a web-based or mobile application interface.

Such systems may enable tracking of energy production, environmental impact metrics such as carbon dioxide reduction, and operational performance across fleets of shared micromobility vehicles.

Example Operational Performance

In certain embodiments, the system may be configured to support riders with a mass of up to approximately 120 kg while maintaining structural safety factors consistent with engineering standards.

Experimental implementations of the system may achieve energy generation outputs on the order of approximately 300 W under favorable operating conditions, with energy conversion efficiencies in the range of approximately 70% based on calculations. These efficiencies may result from the rotational velocity amplification achieved through radial generator placement within the wheel assembly.

The specific values described herein are illustrative examples and may vary depending on system configuration, generator characteristics, wheel size, and operating conditions.

Operation of the System

During operation, rotational motion of the bicycle wheel causes the rim (2) to rotate relative to the stationary generator mounting structure. The rim engages the mechanical couplers (5), which transmits radial offset optimized rotational motion to the generators (3).

As the generators rotate, electrical energy is produced and supplied to the rectifier modules (8). The rectified electrical output is conditioned by the MPPT energy management module (9) and stored within the energy storage battery (10).

Simultaneously, the monitoring system collects operational data related to energy generation and system performance. This information may be processed locally by the microcontroller (11) and transmitted to external systems using wireless communication interfaces.

Mechanical Parts

1. Bike Hub.
2. Sprint Bike Rim: R20, R24, R26, R28, etc. Although in this case we chose R26.
3. Triphasic BLDC (Brushless Motors) with no gear reduction: Putting an output of 39V each and with a weight of 1kg, we place 2 at the wheel for energy generation optimization with a radial offset of 17.5 cm inside the R26 wheel.
4. Aluminum sheets for the wheel's structure.
5. Mechanical couplers, acting as a roller between the Sprint Rim and the generators.
6. 2 Lateral rollers, just used for mechanical stability.
7. Waterproof electrical enclosure.

Electrical Components

8. 2 AC/DC triphasic PCB Rectifiers: Putting an output of 39V as maximum each rectifier.
9. MPPT (Maximum Power Point Tracking) or Buck-Boost Converter.
10. Energy Harvesting Battery LiPo or LiFePO4: 36V.

Embedded System

11. ESP32 Microcontroller with WiFi and LoRa Meshtastic wireless communication.
12. ESP32 battery LiPo or LiFePO4: 5V.
13. Energy Tracker PCB: Integrating microcontroller, GPS, and data gathering sensors.
14. GPS, environmental, and preventive maintenance data gathering sensors.

Conclusion, Ramifications and Scope

The embodiments described herein demonstrate a wheel-integrated energy harvesting system capable of converting rotational motion from a micromobility vehicle wheel into usable electrical energy while maintaining minimal mechanical resistance during normal vehicle operation.

Unlike conventional bicycle dynamo systems, which typically operate at the wheel hub and therefore produce limited rotational velocity and electrical output, the present invention utilizes generators positioned radially offset from the axis of rotation of the wheel. This configuration enables rotational velocity amplification at the generator contact point without the use of mechanical gear reduction systems, thereby improving energy conversion efficiency while preserving rider comfort.

The system further integrates an electrical energy conditioning module and onboard energy storage, allowing harvested energy to be stored and utilized for auxiliary electrical loads or external applications. Additionally, the integration of embedded monitoring electronics enables the collection and wireless transmission of operational data, including energy generation statistics, environmental impact metrics, and system diagnostics.

The combination of mechanical energy harvesting, electrical energy management, and wireless monitoring enables the creation of distributed energy-generating micromobility systems capable of contributing to broader energy and environmental monitoring networks.

The embodiments described herein are illustrative examples of the invention and that various modifications, substitutions, and structural changes may be made without departing from the scope of the invention as defined in the appended claims. Accordingly, the scope of the invention should be determined by the claims and their legal equivalents rather than by the specific embodiments described in this document.

Alternative Configurations

The invention may be implemented in various alternative configurations and embodiments without departing from the scope of the invention.

For example, the system may utilize different numbers of electrical generators distributed around the internal circumference of the wheel depending on the desired electrical output, mechanical constraints, or system weight considerations.

In certain embodiments, alternative energy storage technologies may be employed, including different lithium-based battery chemistries, supercapacitors, or hybrid energy storage systems.

The electrical energy conditioning system may also utilize different types of power conversion architectures, including alternative maximum power point tracking circuits, voltage regulation systems, or energy distribution modules.

In further embodiments, the system may be integrated with existing electric bicycle battery systems or vehicle electrical architectures, enabling harvested energy to supplement onboard vehicle power systems.

The invention may also be applied to other micromobility platforms, including scooters, cargo bicycles, shared mobility fleets, or other human-powered or hybrid transportation devices where rotational wheel motion may be used as an energy source.

Additionally, different wireless communication technologies may be used for data transmission, including cellular communication systems, Bluetooth networks, long-range low-power radio networks, or other Internet-of-Things communication protocols.

Claims

Claim 1 (Independent Claim)

A wheel-based energy generation system comprising:

- a wheel assembly including a hub and a rim.
- at least one electrical generator positioned radially offset from an axis of rotation of the wheel assembly and configured to mechanically engage the rim during rotation of the wheel.
- an electrical energy conditioning system configured to convert electrical output from the generator into regulated electrical power; and an energy storage system configured to store the generated electrical energy.

wherein the radial offset positioning of the generator increases generator rotational velocity relative to the rotational velocity of the hub.

Claim 2

The system of claim 1, wherein a plurality of electrical generators is distributed around an internal circumference of the wheel.

Claim 3

The system of claim 1, wherein the electrical energy conditioning system includes a rectifier circuit configured to convert three-phase alternating current generated by the generator into direct current.

Claim 4

The system of claim 1, wherein the electrical energy conditioning system includes a maximum power point tracking module configured to regulate voltage and current levels during energy harvesting.

Claim 5

The system of claim 1, wherein the energy storage system comprises a rechargeable battery.

Claim 6

The system of claim 1 further comprising an embedded monitoring system configured to collect operational data related to energy generation and system performance.

Claim 7

The system of claim 6, wherein the embedded monitoring system includes a microcontroller configured to transmit collected operational data using wireless communication.

Claim 8

The system of claim 7, wherein the wireless communication system utilizes a mesh networking protocol.

Claim 9

The system of claim 6, wherein the monitoring system includes one or more sensors configured to collect environmental, positional, or maintenance-related data.

Claim 10

The system of claim 1, wherein the generator engages the rim through one or more rolling mechanical couplers configured to transfer rotational motion from the rim to the generator.

Figures:

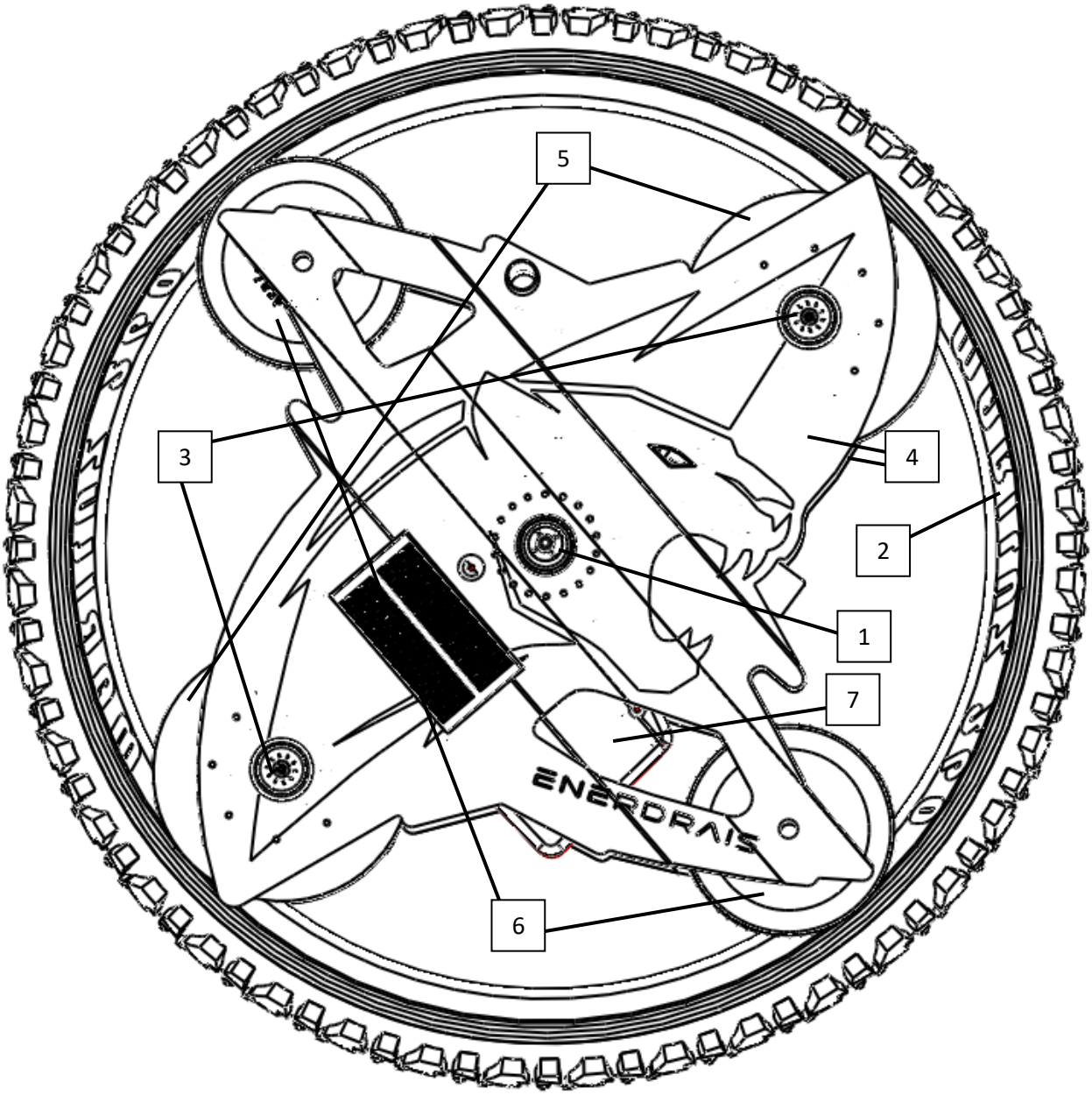

Fig. 1

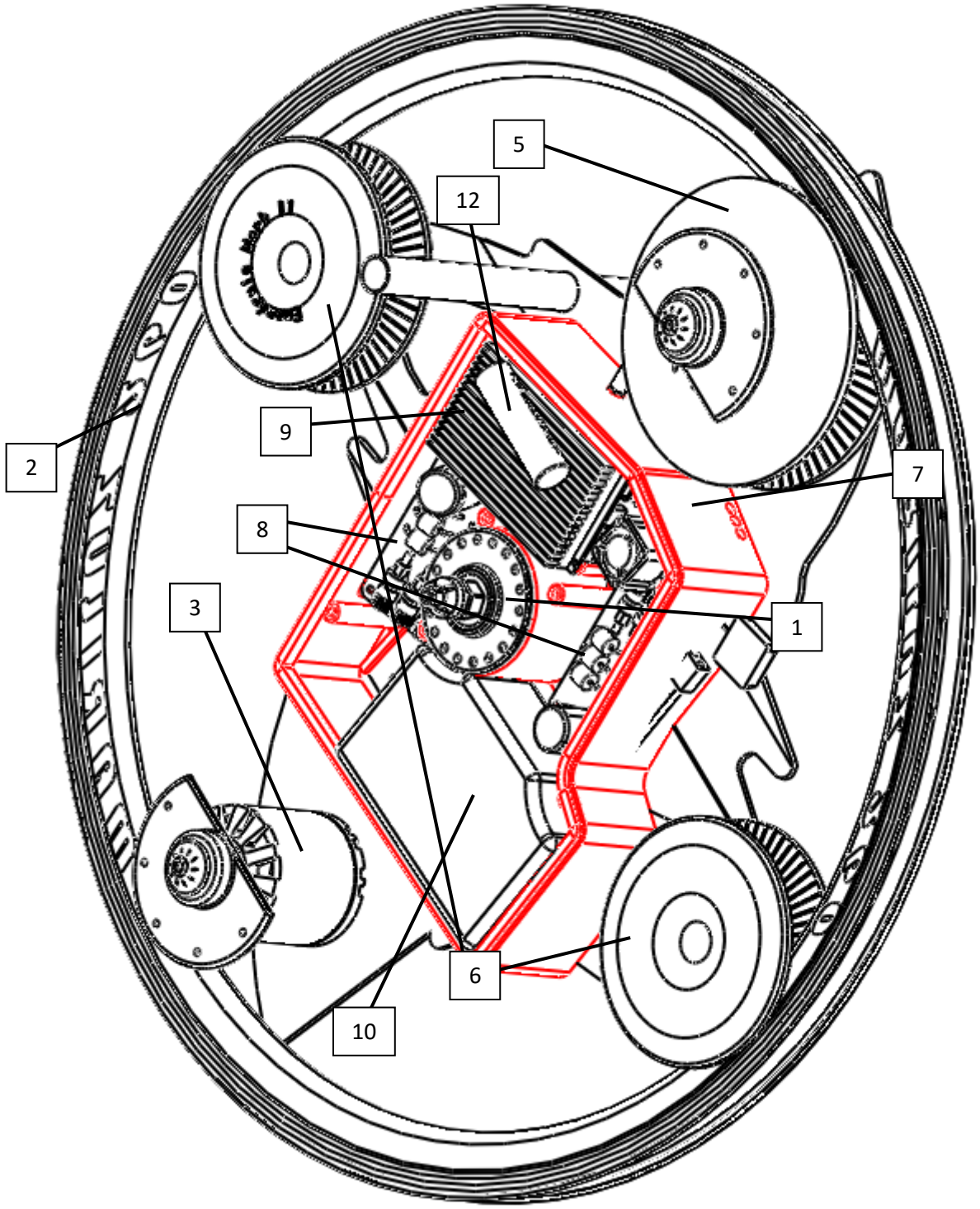

Fig 2.

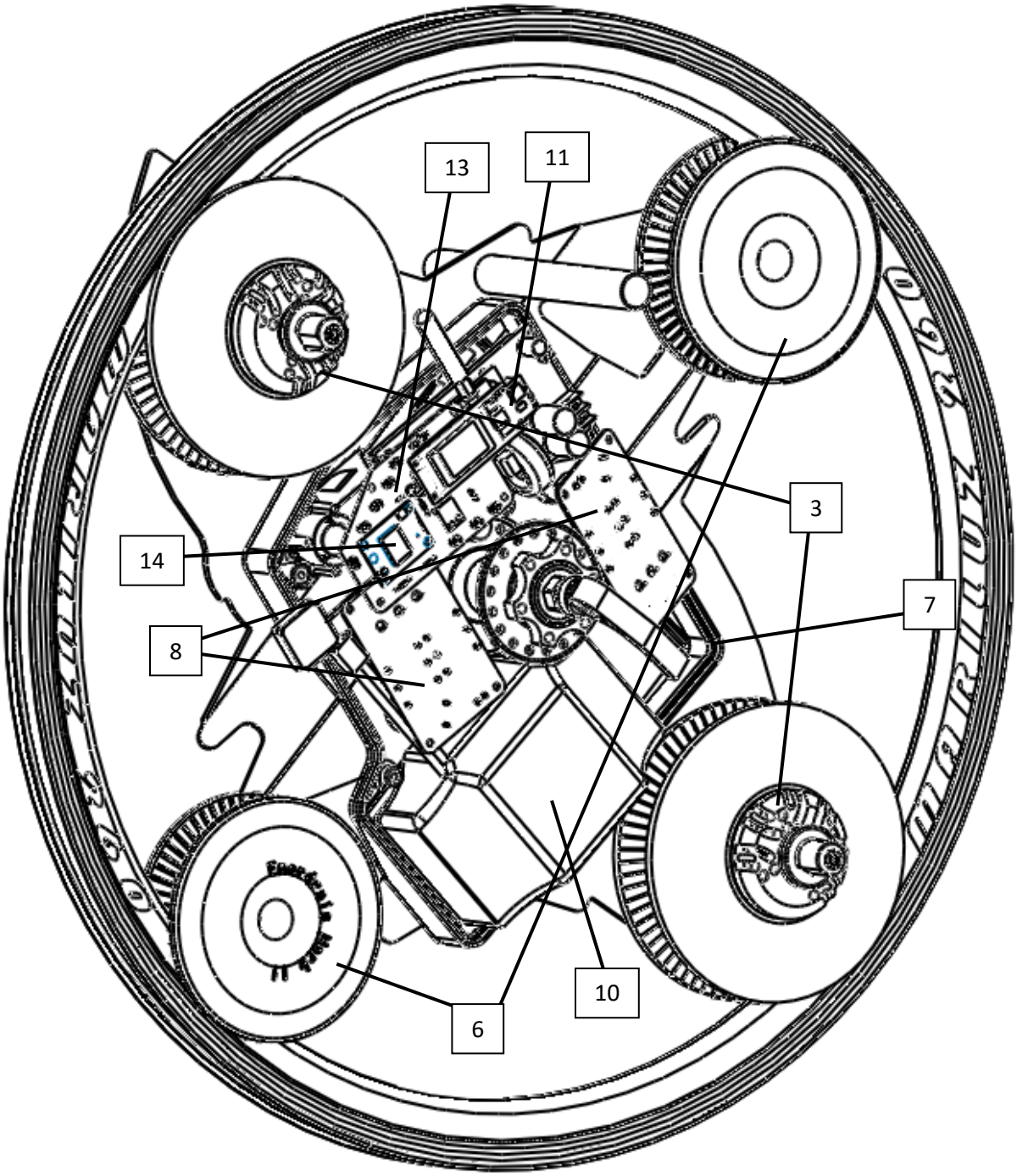

Fig 3.

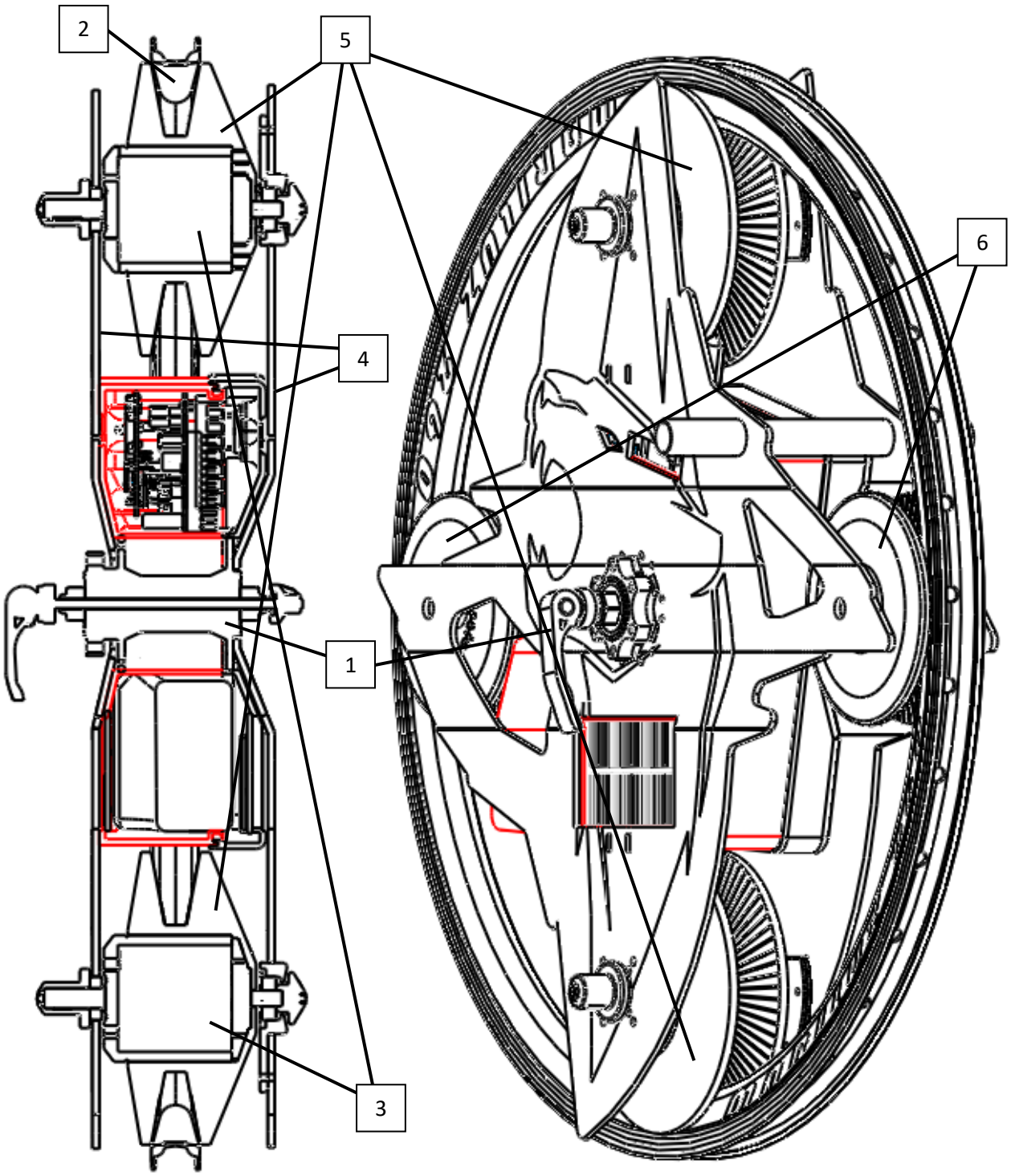

Fig 4.

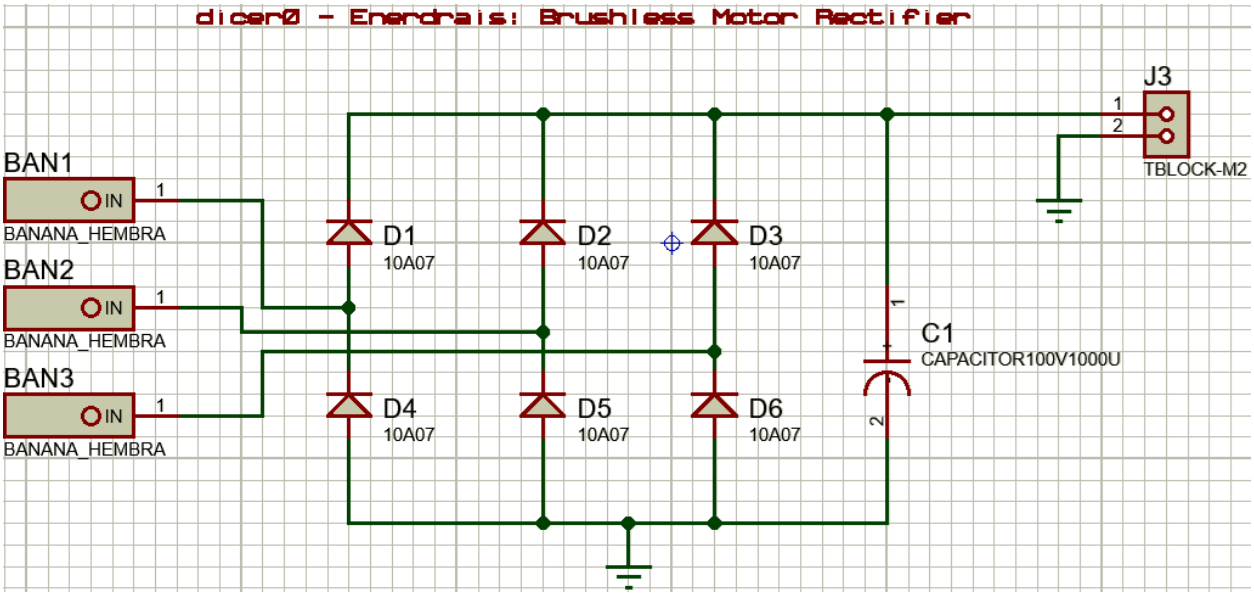
dicer0 - Enerdrais: Brushless Motor Rectifier
BAN1
IN
BANANA_HEMBRA
BAN2
IN
BANANA_HEMBRA
BAN3
IN
BANANA_HEMBRA
D1
10A07
D2
10A07
D3
10A07
D4
10A07
D5
10A07
D6
10A07
C1
CAPACITOR100V1000U
J3
TBLOCK-M2

Fig 5.

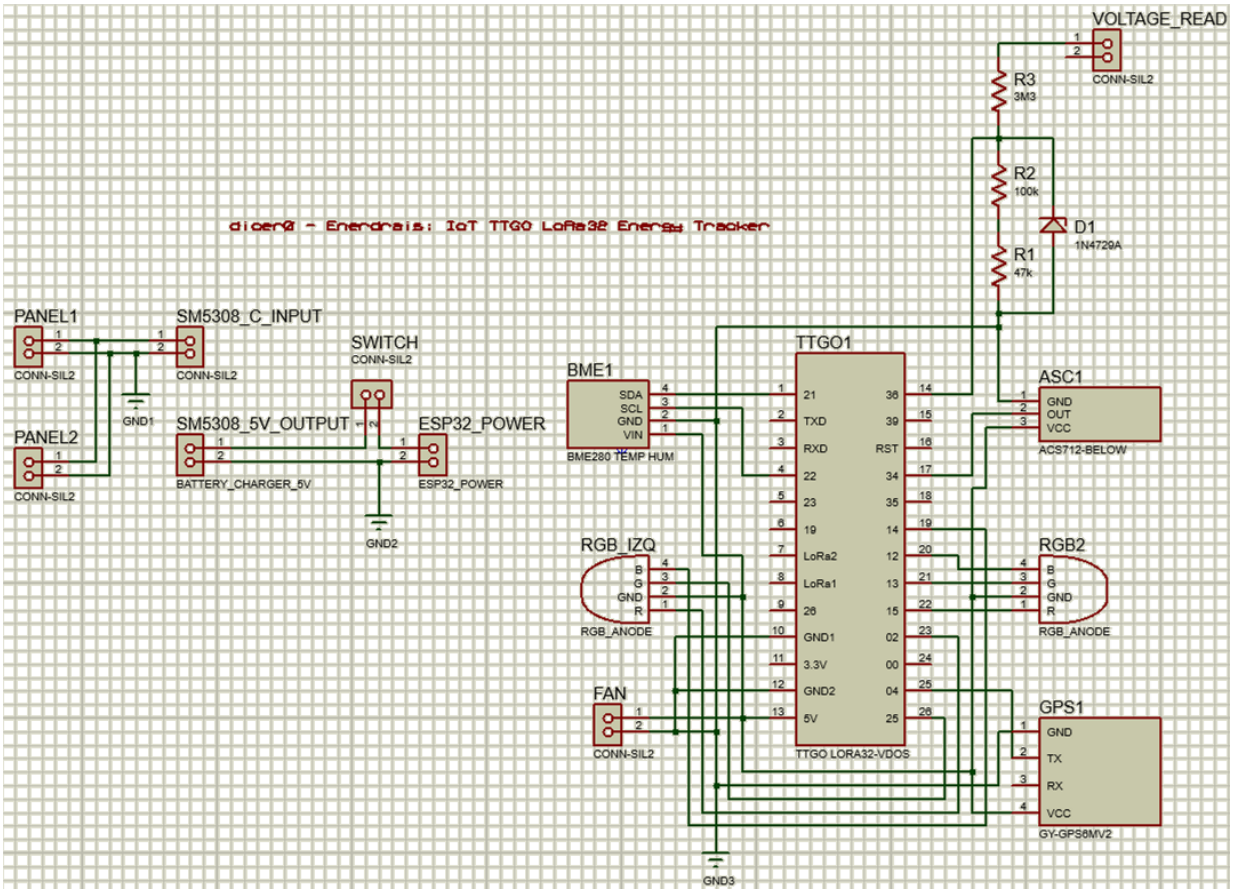
dicer0 - Enerdrais: IoT TTGO LoRa32 Energy Tracker
VOLTAGE_READ
CONN-SIL2
R3
3M3
R2
100k
R1
47k
D1
1N4729A
PANEL1
CONN-SIL2
SM5308_C_INPUT
CONN-SIL2
GND1
PANEL2
CONN-SIL2
SM5308_5V_OUTPUT
BATTERY_CHARGER_5V
SWITCH
CONN-SIL2
GND2
ESP32_POWER
ESP32_POWER
BME1
SDA
SCL
GND
VIN
BME280 TEMP HUM
TTGO1
21
TXD
RXD
22
23
19
LoRa2
LoRa1
26
GND1
3.3V
GND2
5V
36
39
RST
34
35
14
12
13
15
02
00
04
25
TTGO LORA32-VDOS
ASC1
GND
OUT
VCC
ACS712-BELOW
RGB_IZQ
B
G
GND
R
RGB_ANODE
RGB2
B
G
GND
R
RGB_ANODE
FAN
CONN-SIL2
GPS1
GND
TX
RX
VCC
GY-GPS6MV2
GND3

Fig 6.

Comparative Table

Feature	Enerdrais	US10076954	CN104670412	CN101428567
Energy generation method	Radial offset generators	Mechanical drivetrain energy harvesting	Gear-based generator	Gear transmission generator
Gear system	No gears	Mechanical transmission	Gear system	Gear system
Generator position	Inside rim	Drivetrain	Wheel hub	Wheel hub
Velocity amplification	Radial offset principle	Mechanical ratio	Gear ratio	Gear ratio
Energy storage	Battery + MPPT	Battery	Battery	Battery
Smart monitoring	IoT telemetry	No	No	No
Data connectivity	WiFi + LoRa mesh	No	No	No
Environmental tracking	Yes	No	No	No
System complexity	Medium	High	Medium	Medium
Main novelty	Radial velocity amplification + IoT	drivetrain generator	hub generator	hub generator

Propiedad	US10076954	CN104670412	CN101428567	US2006287151	US12420890	CN112787547	Enerdrais V1 (tesis)	Enerdrais V2
Tipo de sistema	rueda eléctrica	generador bicicleta	generador mecánico	generador bicicleta	sistema energía bicicleta	sistema inteligente	rueda generadora	rueda generadora IoT
Ubicación generador	hub	rueda / transmisión	rueda	rueda	rueda	rueda	**rin interno**	**rin interno**
Generador	no	no	no	no	posible	no	**sí**	**sí**

es múltiples								
Desplazamiento del eje	no	no	no	no	no	no	**sí**	**sí**
Amplificación de velocidad por radio	no	no	no	no	no	no	**sí**	**sí**
Tipo transmisión	engranes planetarios	directa	fricción	directa	directa	directa	contacto rim	contacto rim
Control electrónico	sí	básico	no	básico	avanzado	avanzado	**app Android**	**ESP32 + firmware**
Selección voltaje salida	no	no	no	no	no	no	**5V / 54V**	no
MPPT	no	no	no	no	posible	posible	no	**sí**
Almacenamiento interno	sí	opcional	pequeño	sí	sí	sí	opcional	**batería 36V**
IoT	no	no	no	no	limitado	sí	no	**sí**
Comunicación RF	no	no	no	no	no	no	no	**LoRa Meshtastic**
Red energética	no	no	no	no	no	no	no	**sí**
Estación de descarga	no	no	no	no	no	no	no	**sí**
Monitoreo energético	no	no	no	no	no	sí	parcial	**completo**
Cálculo CO_2	no	no	no	no	no	no	no	**sí**
ROI	no	no	no	no	no	no	no	**sí**

energético								

Patente	País / Tipo	Tema principal	Qué describe	Elemento técnico clave	Diferencia principal
US10076954 B2	Estados Unidos	Rueda eléctrica auto-contenida	Rueda para bicicleta con motor, batería y transmisión integrados dentro del aro	Sistema **planetary orbital drive** con rodillos internos	Integra **todo el sistema eléctrico dentro de la rueda**, no solo la transmisión
CN104670412 A	China	Drive unit para e-bike	Unidad de transmisión compacta para bicicleta eléctrica	**Doble reducción planetaria** con carcasa del motor participando en la transmisión	Enfocada en **optimizar tamaño y estabilidad del motor-drive**
CN101428567 A	China	Mecanismo de transmisión e-bike	Sistema de engranajes entre motor y rueda para mejorar eficiencia	**Gear train optimizado** para reducción de velocidad	Se centra en **estructura del tren de engranajes**
CN105059462 A	China	Motor hub para e-bike	Diseño de motor integrado en el hub de la rueda	**Motor hub compacto con sistema de transmisión interno**	Optimización de **estructura del hub motor**
US2006287151 A1	Estados Unidos	Sistema de propulsión eléctrica para bicicleta	Arquitectura de transmisión eléctrica entre motor y rueda	**Motor + transmisión mecánica** para asistencia al pedaleo	Sistema de **asistencia eléctrica temprana**
US12420890 B2	Estados Unidos	Sistema moderno de drive para e-bike	Arquitectura avanzada de transmisión para bicicletas eléctricas	**Integración electrónica + transmisión mecánica**	Patente más reciente, incluye **control electrónico más avanzado**

CN112787547A	China	Motor drive inteligente	Sistema de motor y control para bicicletas eléctricas	**Integración motor + control system**	Introduce **control inteligente del motor**
JP2007030755A	Japón	Sistema de transmisión para e-bike	Mecanismo de transmisión entre motor y rueda	**Gear reduction mechanism**	Se enfoca en **simplificar el mecanismo de transmisión**
JP2007030755A	Japón	(misma patente)	Igual que la anterior	Igual	Es el mismo documento con distinto formato
WO0200492 A1	Internacional	Sistema de propulsión eléctrica	Diseño de motor eléctrico para bicicletas	**Sistema de transmisión eléctrico temprano**	Patente **internacional temprana** en el campo
CN201570965U	China (utility model)	Motor hub	Diseño estructural de motor en la rueda	**Configuración estructural del hub motor**	Protege **estructura mecánica**, no el sistema completo
CN201570965U	China	(misma patente)	Igual que la anterior	Igual	Versión duplicada del mismo modelo de utilidad
EP4253209 A1	Europa	Sistema avanzado de e-bike	Arquitectura moderna de transmisión eléctrica	**Drive system optimizado para eficiencia**	Más reciente en **optimización energética**